Parts Manual

Mfg. No: 61E877-0005-J1

Copyright © Briggs and Stratton. All Rights reserved

05-Mar-2020

Model Components

Page

Air Cleaner, Muffler. 4
Air Guides, Springs, Control Bracket. 6
Blower Housings, Flywheel, Oil Cooler. 8
Cylinder Heads, Rocker Covers. 12
Cylinders, Crankshaft, Pistons/Rings/Rods. 14
Electric Starter, Armature, Regulator, E/C Module. 16
Engine Gasket Set, Valve Gasket Set. 18
Engine Sumps, Camshafts. 20
Intake Manifold, Throttle Body, Fuel Lines. 22
Oil Guard System - Tank, Hoses. 26
Replacement Engine - US & Canada. 28

Not For
InReproduction

Copyright © Briggs and Stratton. All Rights reserved

Air Cleaner, Muffler

Mfg. No: 61E877-0005-J1

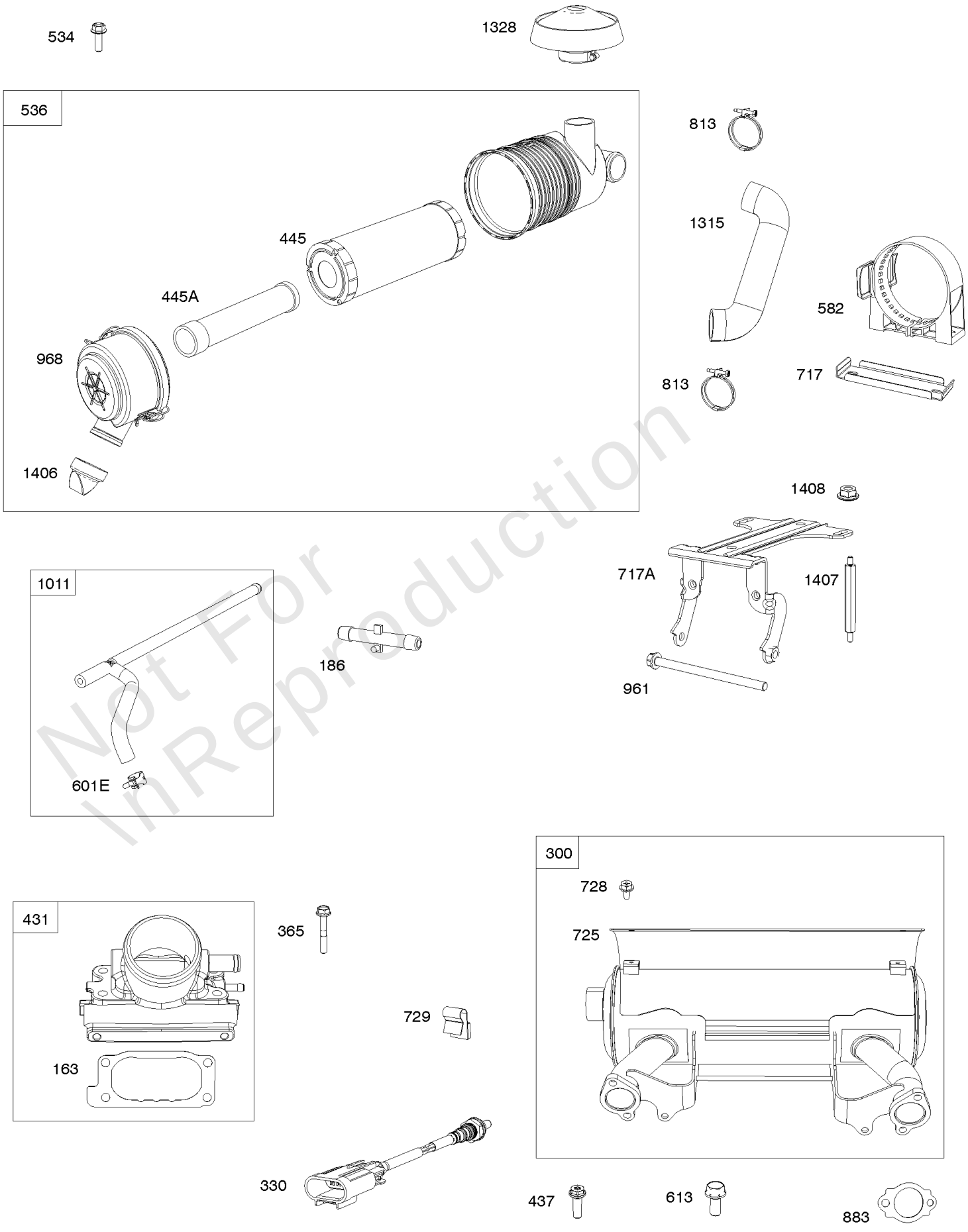

Not For Reproduction

Air Cleaner, Muffler

REF NO	PART NO	QTY	DESCRIPTION
163	807375		GASKET, Air Cleaner
330	593870		SENSOR, Oxygen
365	807357		SCREW -(Carburetor/Throttle Body)
431	846828		MANIFOLD, Intake
437	809743		SCREW -(Exhaust Manifold) (M8x25mm)
445	841497		FILTER, A/C Cartridge
445A	821136		FILTER, A/C Cartridge
534	807382		SCREW -(Air Cleaner) (M8x25mm)
536	809670		CLEANER, Air
582	809878		CLAMP, Air Cleaner
601E	846483		CLAMP, Hose -(Air Hose)
613	692062		SCREW -(Muffler) (M8x18mm)
717	841886		BRACKET, Air Cleaner
717A	846832		BRACKET, Air Cleaner
725	847229		SHIELD, Heat
728	692067		SCREW -(Heat Shield)
729	846826		CLIP, Wire -(Oxygen Sensor Wire)
813	807376		CLAMP
883	809872		GASKET, Exhaust
961	846829		SCREW -(Air Cleaner Bracket) (M8x25mm)
968	842621		COVER, Air Cleaner
1011	846830		TUBE, Vent
1315	846827		HOSE, Air Cleaner
1328	809907		CAP, A/C Rain
1406	842623		VALVE, Debris
1407	846831		STUD -(Air Cleaner Bracket)
1408	690939		NUT -(Air Cleaner Bracket)

Not For Reproduction

Copyright © Briggs and Stratton. All Rights reserved

Air Guides, Springs, Control Bracket

Mfg. No: 61E877-0005-J1

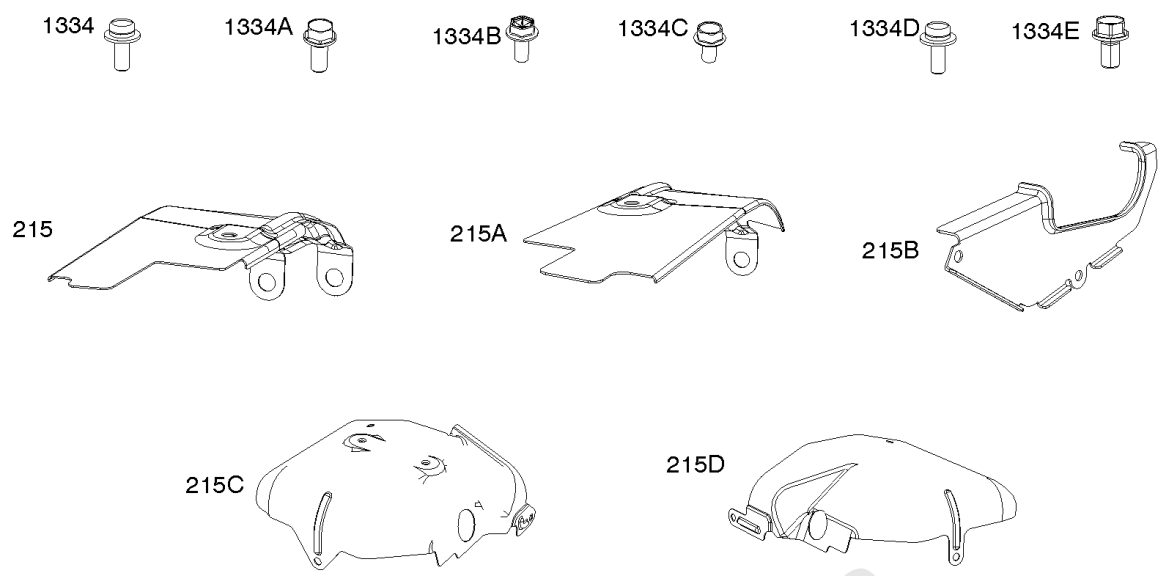

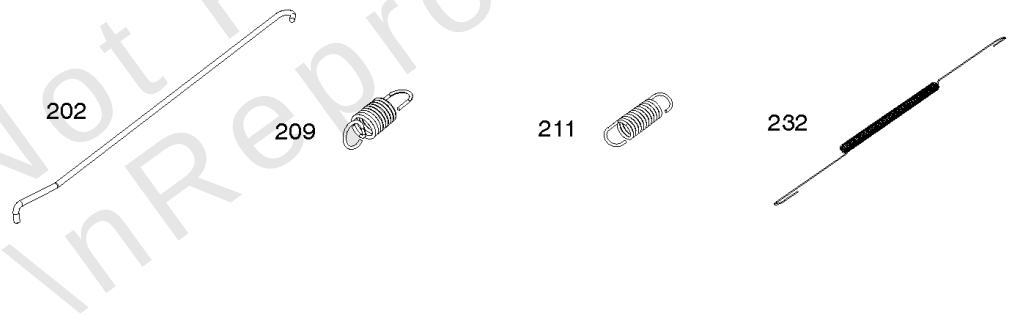

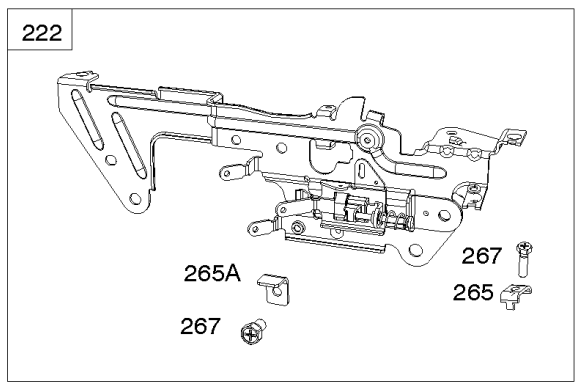

188

Not For Reproduction

Air Guides, Springs, Control Bracket

REF NO	PART NO	QTY	DESCRIPTION
188	692062		SCREW -(Control Bracket) (M8x18mm)
202	846825		LINK, Mechanical Governor
209	841500		SPRING, Governor -(Purple)
211	809875		SPRING, Governed Idle -(White)
215	846455		GUIDE, Air -(Cylinder #1)
215A	846460		GUIDE, Air -(Valley)
215C	809738		GUIDE, Air -(Cylinder #1)
215D	809897		GUIDE, Air -(Cylinder #2)
215B	846458		GUIDE, Air
222	846818		BRACKET, Control
232	843248		SPRING/LINK, Governor
265	691024		CLAMP, Casing
265A	841673		CLAMP, Casing -(Control Bracket)
267	841552		SCREW -(Casing Clamp)
1334	690677		SCREW -(Air Guide) (M8x12mm)
1334A	692062		SCREW -(Air Guide) (M8x18mm)
1334C	841233		SCREW -(Air Guide) (M6x10mm)
1334D	807435		SCREW -(Air Guide) (M6x20mm)
1334E	692056		SCREW -(Air Guide) (M8x14mm)
1334B	807084		SCREW -(Air Guide) (M6x14mm)

Not For Reproduction

Copyright © Briggs and Stratton. All Rights reserved

Blower Housings, Flywheel, Oil Cooler

Mfg. No: 61E877-0005-J1

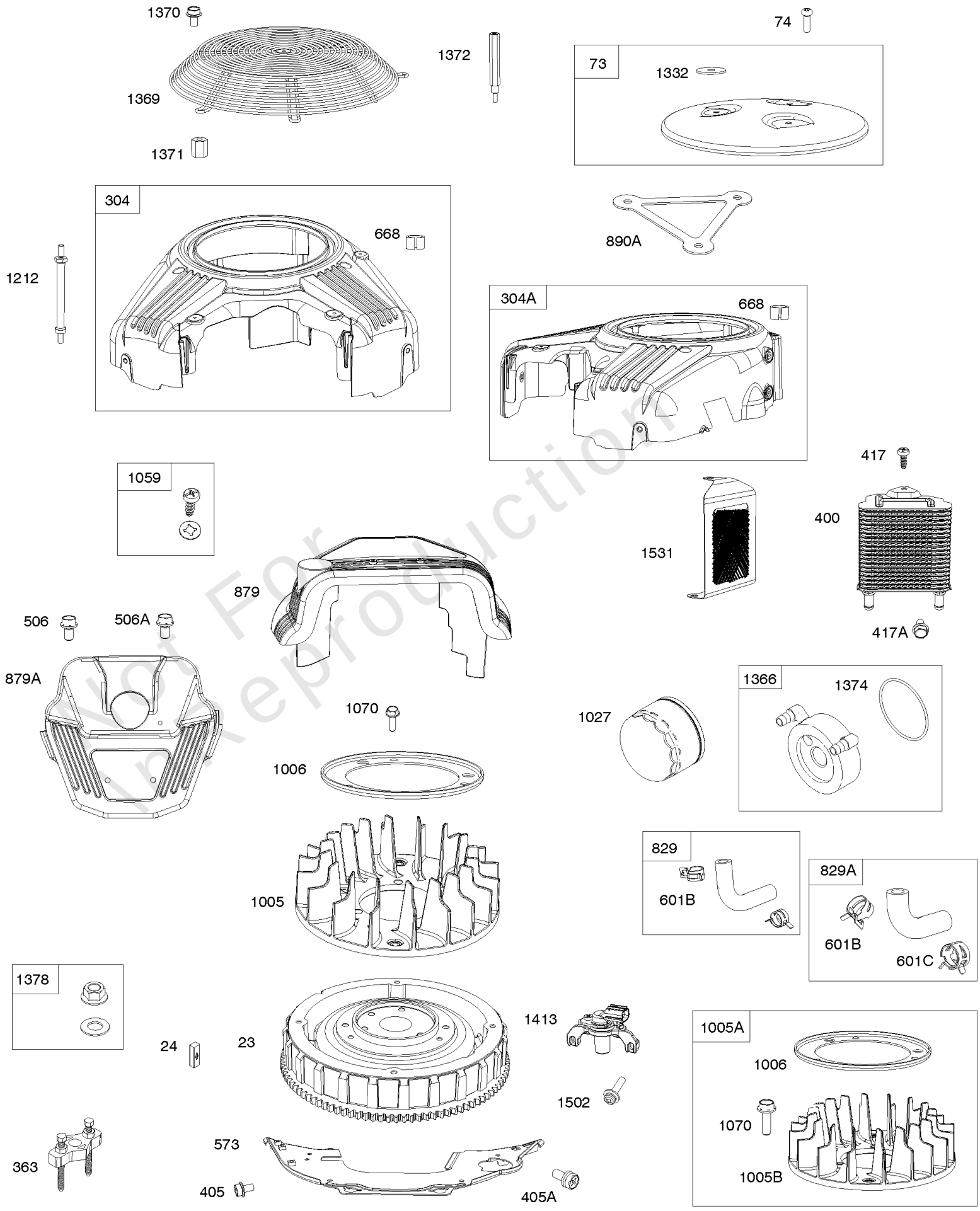

Not For Reproduction

Blower Housings, Flywheel, Oil Cooler

REF NO	PART NO	QTY	DESCRIPTION
23	846836		FLYWHEEL
24	796335		KEY, Flywheel -(Steel)
73	841840		SCREEN, Rotating
74	809947		SCREW -(Rotating Screen)
304A	847386		HOUSING, Blower -(Non Oil Cooler)
363	19203		PULLER, Flywheel
400	846249		COOLER, Oil
405	841233		SCREW -(Back Plate) (M6x10mm)
405A	841735		SCREW -(Back Plate) (M6x14mm)
417	846250		SCREW -(Oil Cooler) (Top) (M6x16mm)
417A	841233		SCREW -(Oil Cooler) (Bottom) (M6x10mm)
506	692056		SCREW -(Carburetor/EFI Cover) (M8x14mm)
506A	845964		SCREW -(Carburetor/EFI Cover) (M8x10mm)
573	846840		PLATE, Back
601B	841597		CLAMP, Hose -(Oil Cooler Hose)
601C	845209		CLAMP, Hose -(Oil Cooler Hose)
668	841974		SPACER -(Blower Housing)
829	846248		HOSE, Oil Cooler
829A	846247		HOSE, Oil Cooler
879	846883		COVER, Carburetor/EFI
879A	846833		COVER, Carburetor/EFI -(Front)
890A	809987		BRACKET, Support -(Rotating Screen)
1005	846996		FAN, Flywheel -Used After Code Date 15080600
1005A	847199		FAN, Flywheel -Used Before Code Date 15080700
1005B	846995		FAN, Flywheel -Used Before Code Date 15080700
1006	847198		RETAINER, Fan
1059	845300		KIT, Screw/Washer -(Carburetor/EFI Cover)
1070	807435		SCREW -(Flywheel Fan) (M6x20mm)
1212	809958		STUD -(Blower Housing)
1332	809948		WASHER -(Rotating Screen)
1366	841510		DIVERTER, Oil Cooler
1369	842858		GUARD, Flywheel Fan
1370	841233		SCREW -(Flywheel Fan Guard) (M6x10mm)
1371	841537		NUT -(Flywheel Fan Guard)
1372	809946		STUD -(Rotating Screen)

Not For Reproduction

Copyright © Briggs and Stratton. All Rights reserved

Blower Housings, Flywheel, Oil Cooler

Mfg. No: 61E877-0005-J1

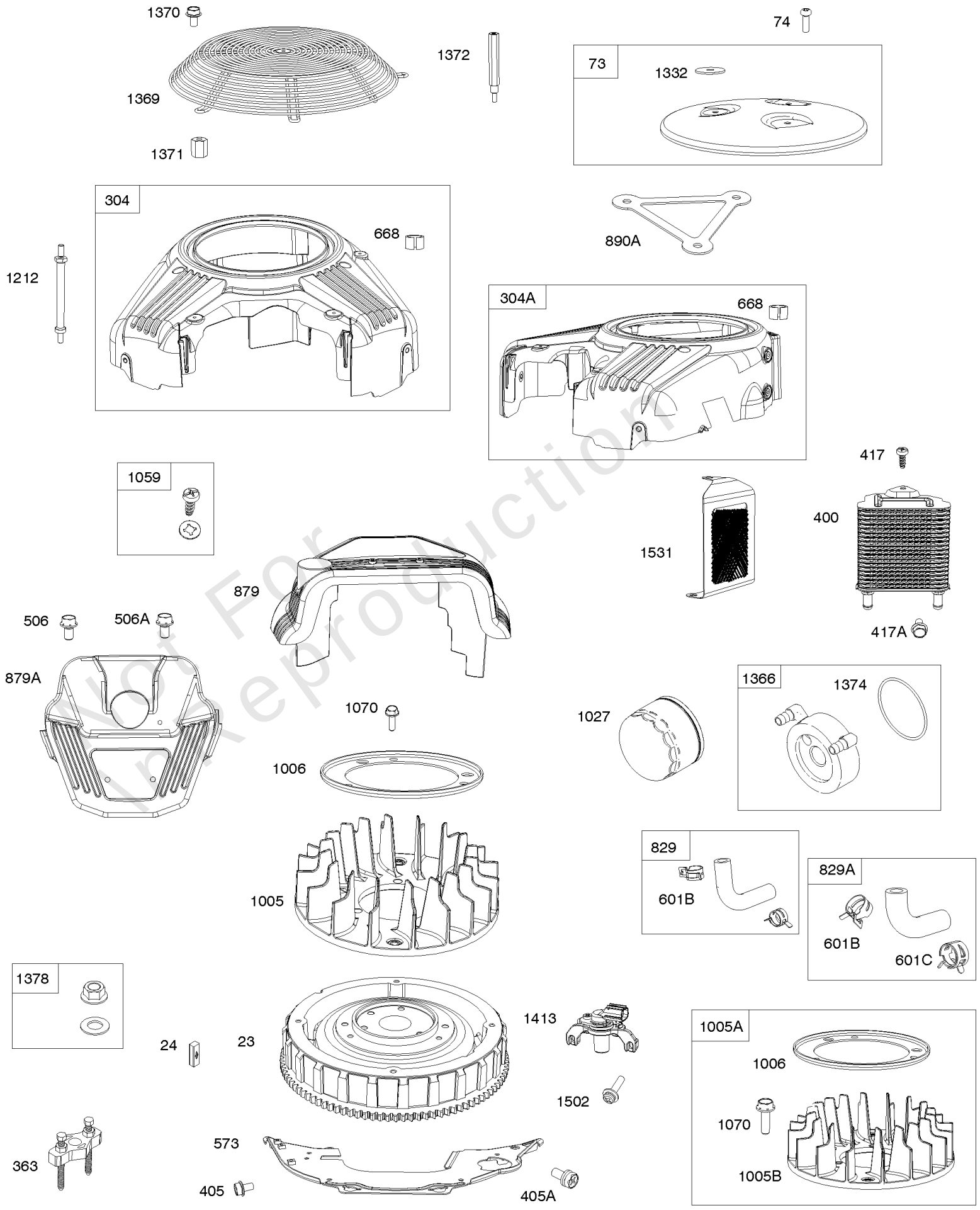

Not For Reproduction

Blower Housings, Flywheel, Oil Cooler

REF NO	PART NO	QTY	DESCRIPTION
1374	841506		SEAL, O-Ring -(Oil Cooler Diverter)
1378	844795		SET, Washer/Nut -(Flywheel)
1413	846457		SENSOR, Speed
1502	846868		SCREW -(Speed Sensor) (M4x18mm)
1531	847397		GUARD, Debris Screen

Not For\nReproduction

Copyright © Briggs and Stratton. All Rights reserved

Cylinder Heads, Rocker Covers

Mfg. No: 61E877-0005-J1

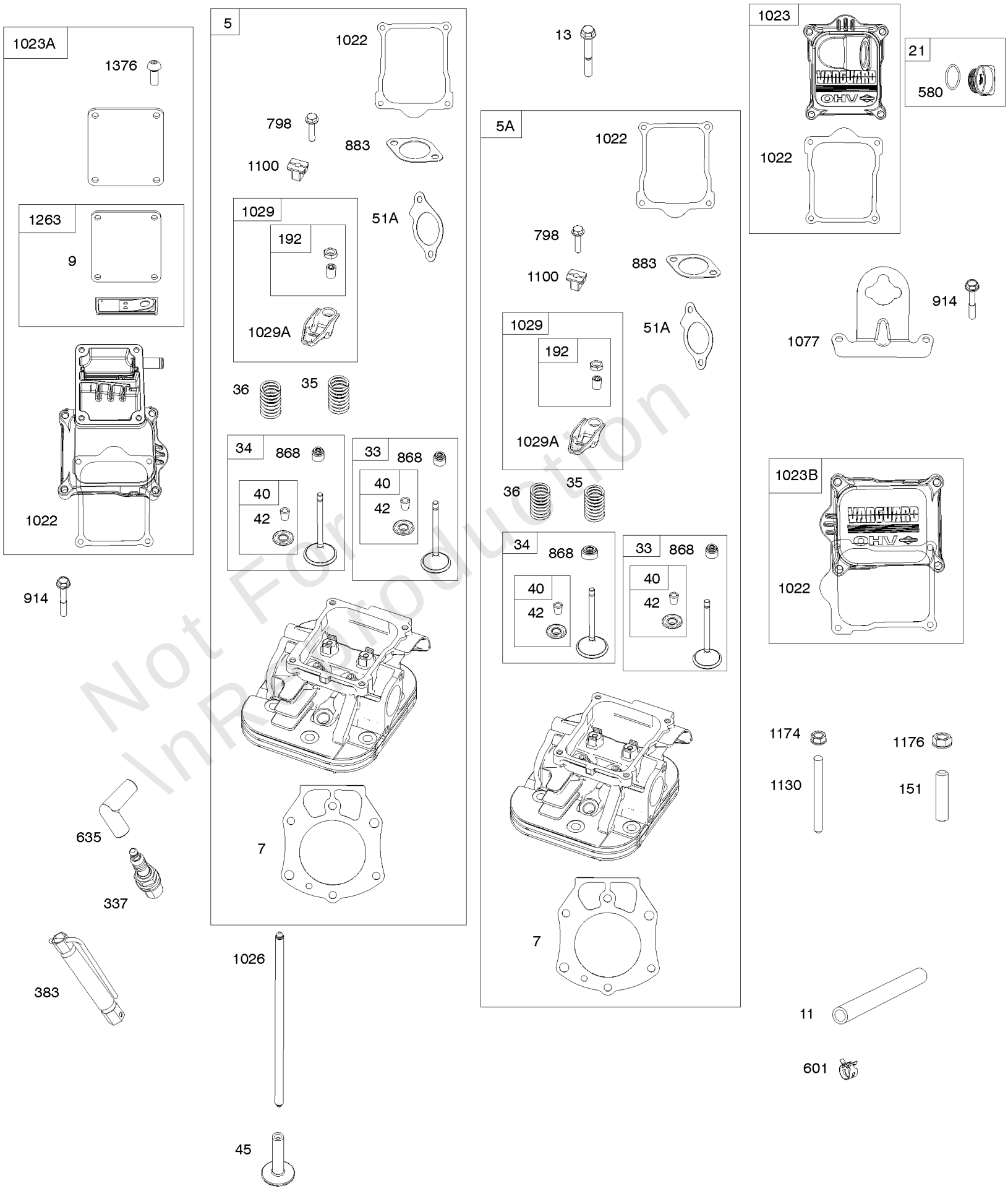

Not For Reproduction

Cylinder Heads, Rocker Covers

REF NO	PART NO	QTY	DESCRIPTION
5	846463		HEAD, Cylinder -(Cylinder 1)
5A	846464		HEAD, Cylinder -(Cylinder 2)
7	809730		GASKET, Cylinder Head
9	842545		GASKET, Breather
11	842541		TUBE, Breather
13	809784		SCREW -(Cylinder Head) (M9x70mm)
33	844787		VALVE, Exhaust
34	846469		VALVE, Intake
35	845589		SPRING, Valve -(Intake) (Intake) (Pink)
36	845589		SPRING, Valve -(Exhaust) (Exhaust) (Pink)
40	844788		RETAINER, Valve
42	807683		KEEPER, Valve
45	809785		TAPPET, Valve
51A	841592		GASKET, Intake
192	690083		ADJUSTER. Rocker Arm
337	792015		PLUG, Spark
383	19576S		WRENCH, Spark Plug
601	844405		CLAMP, Hose -(Breather Tube)
635	692076		BOOT, Spark Plug
798	691492		SCREW -(Rocker Arm) (M6x30mm)
868	691963		SEAL, Valve
883	809872		GASKET, Exhaust
914	807357		SCREW -(Rocker Cover) (M6x40mm)
1022	809732		GASKET, Rocker Cover
1023B	847384		COVER, Rocker -(Cylinder 2)
1026	809783		ROD, Push -(Intake and Exhaust)
1029	690972		ARM, Rocker
1029A	807323		ARM, Rocker
1077	809729		BRACKET, Lifting
1100	791959		PIVOT, Rocker Arm
1130	841590		STUD -(Intake Manifold)
1174	842067		NUT -(Intake Manifold)
1263	842544		REED, Breather
1376	842547		SCREW -(Breather Reed Cover)

Not For Reproduction

Mfg. No: 61E877-0005-J1

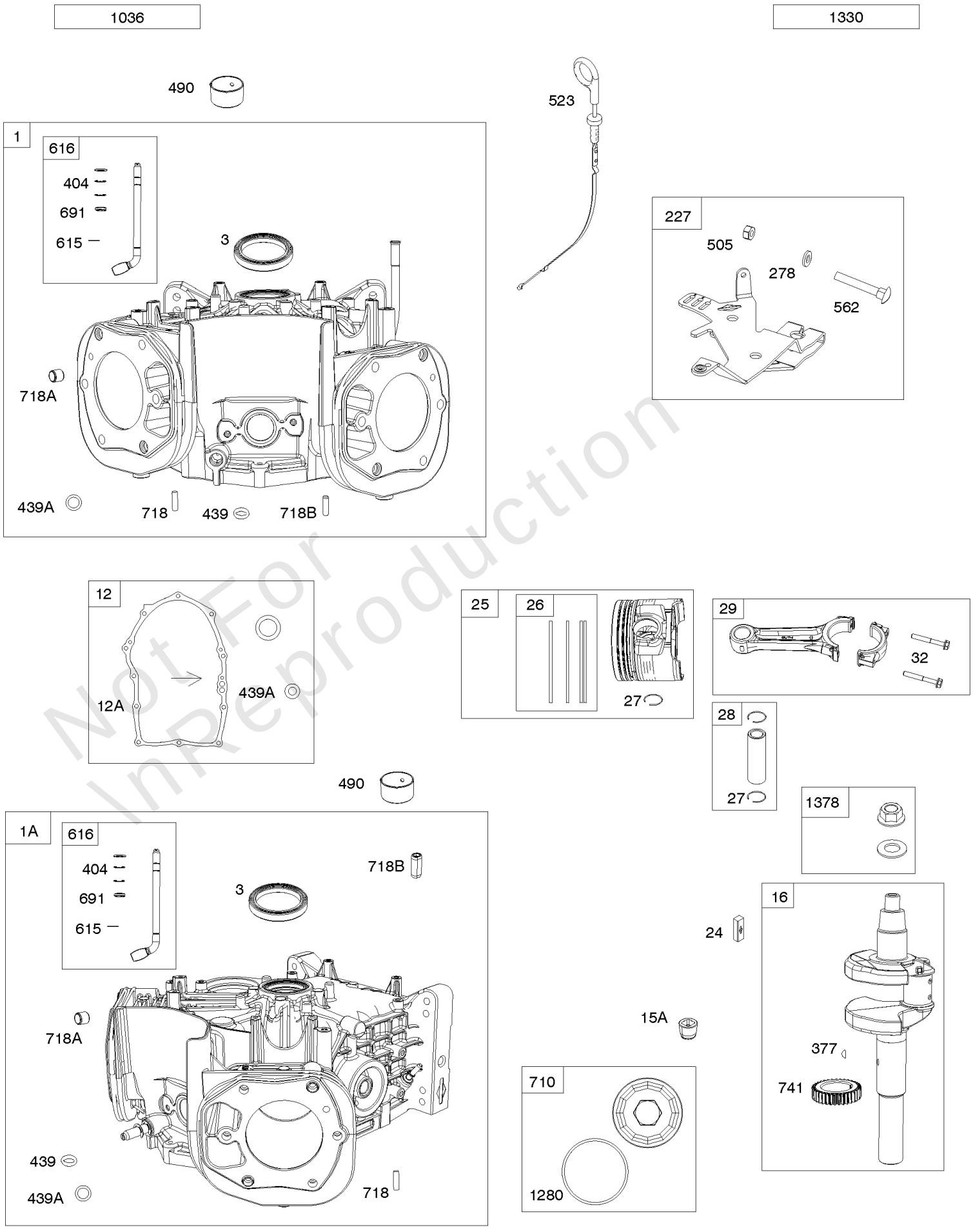

Not For Online Reproduction

Cylinders, Crankshaft, Pistons/Rings/Rods

REF NO	PART NO	QTY	DESCRIPTION
1A	847387		CYLINDER ASSEMBLY
3	841596		SEAL, Oil -(Magneto Side)
12	846037		GASKET, Crankcase -(Metal Core Gasket)
12A	843969		GASKET, Crankcase -(Metal Core Gasket)
15A	691680		PLUG, Oil Drain
16	843354		CRANKSHAFT
24	796335		KEY, Flywheel -(Steel)
25	841837		PISTON ASSEMBLY -(Standard)
25	842939		PISTON ASSEMBLY -(.020 Oversize)
26	841932		SET, Ring -(.020 Oversize)
26	809972		SET, Ring -(Standard)
27	807351		LOCK, Piston Pin
28	807361		PIN, Piston
29	841838		ROD, Connecting
32	807363		SCREW -(Connecting Rod)
227	809984		LEVER, Governor Control
278	842122		WASHER -(Governor Control Lever)
377	691639		KEY, Timing
404	809436		WASHER -(Governor Crank)
439	692154		O-RING, Oil Gallery -(Crankcase Cover/Sump or Cylinder Assembly)
439A	846027		O-RING, Oil Gallery -(Crankcase Cover/Sump or Cylinder Assembly)
490	843433		BEARING, Magneto Side
505	844752		NUT -(Governor Control Lever)
562	843344		BOLT -(Governor Lever)
615	809533		RETAINER, Governor Shaft -(Cylinder)
616	844180		CRANK, Governor
691	809287		SEAL, Governor Shaft
710	847356		COVER, Oil Filter
718	690959		PIN, Locating -(Cylinder)
718A	809508		PIN, Locating -(Cylinder Head)
718B	845925		PIN, Locating -(Cylinder)
741	809432		GEAR, Timing
1036	-----		Label-Emissions -(Available From A Briggs & Stratton Authorized Dealer)
1280	841506		SEAL, O-Ring -(Oil Filter Cover)
1330	-----		Repair Manual -(Not Available At This Printing)
1378	844795		SET, Washer/Nut -(Flywheel)

Not For Reproduction

Copyright © Briggs and Stratton. All Rights reserved

Mfg. No: 61E877-0005-J1

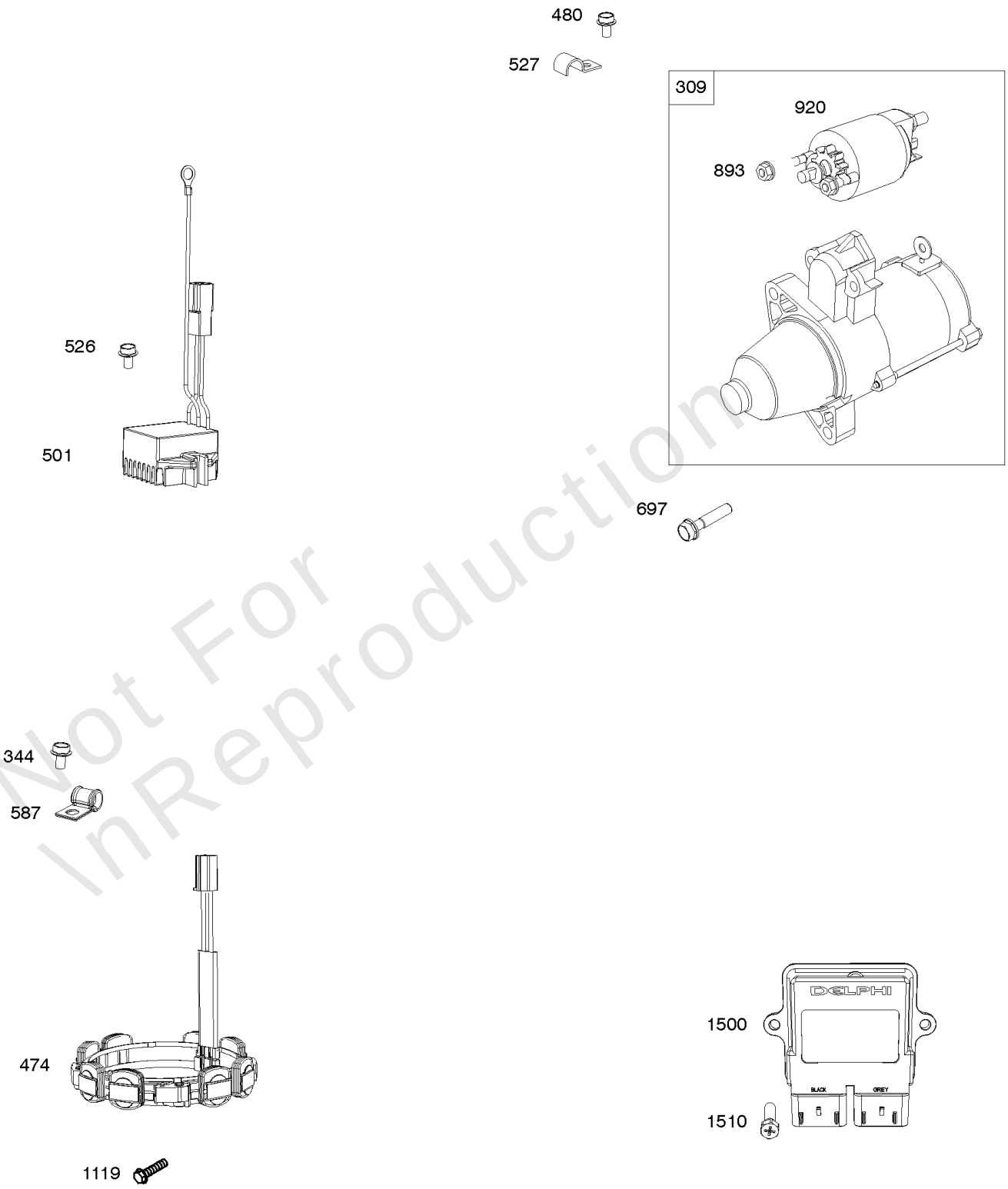

Not For Reproduction

Electric Starter, Armature, Regulator, E/C Module

REF NO	PART NO	QTY	DESCRIPTION
309	845761		MOTOR, Starter
344	841233		SCREW -(Cable Clamp) (M6x10mm)
474	846882		ALTERNATOR
480	841233		SCREW -(Tube Clamp) (M6x10mm)
501	847385		REGULATOR
526	690717		SCREW -(Regulator) (M6x30mm)
527	690423		CLAMP, Tube -(TEMP/MAP Sensor) (Intake Manifold)
587	846866		CLAMP, Cable
697	690711		SCREW -(Starter Motor) (Drive Cap) (M8x38mm)
893	845758		NUT -(Starter Solenoid)
920	846737		SOLENOID, Starter
1119	691552		SCREW -(Alternator)
1500	846484		MODULE, Electronic Control -(Not Programmed) (Not Programmed)
1510	841552		SCREW -(Electronic Control Module) (M5x20mm)

Not For Reproduction

Copyright © Briggs and Stratton. All Rights reserved

Engine Gasket Set, Valve Gasket Set

Mfg. No: 61E877-0005-J1

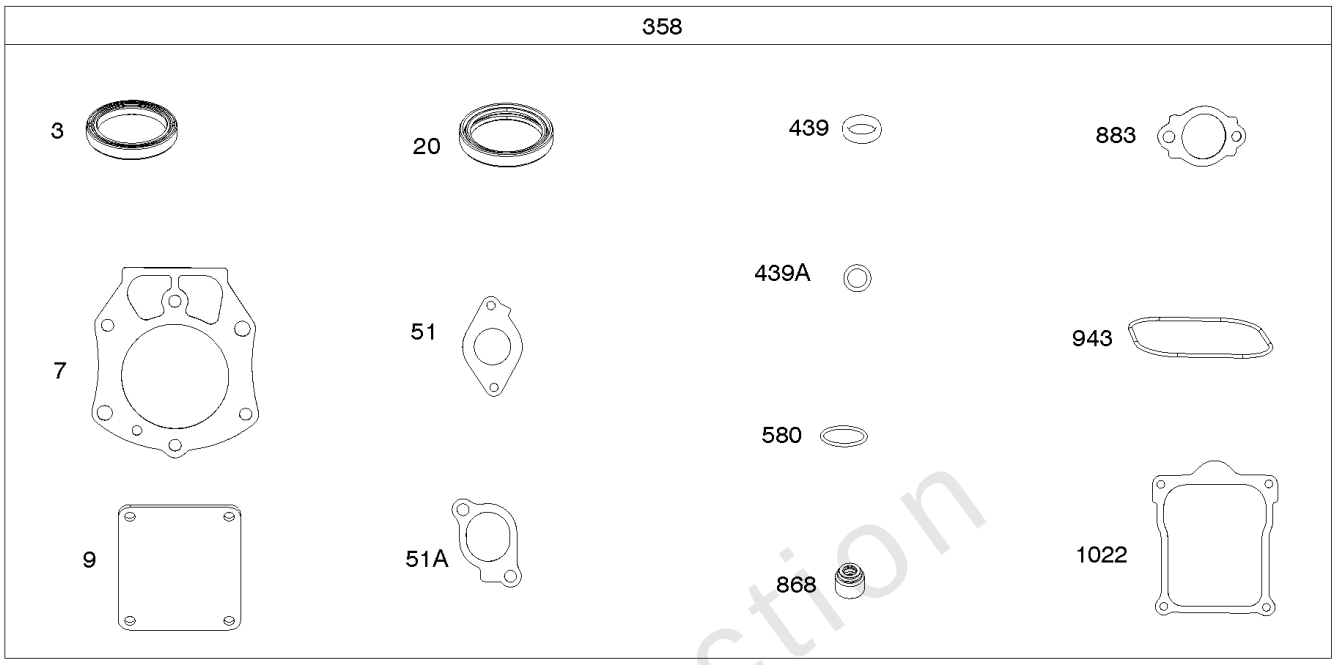

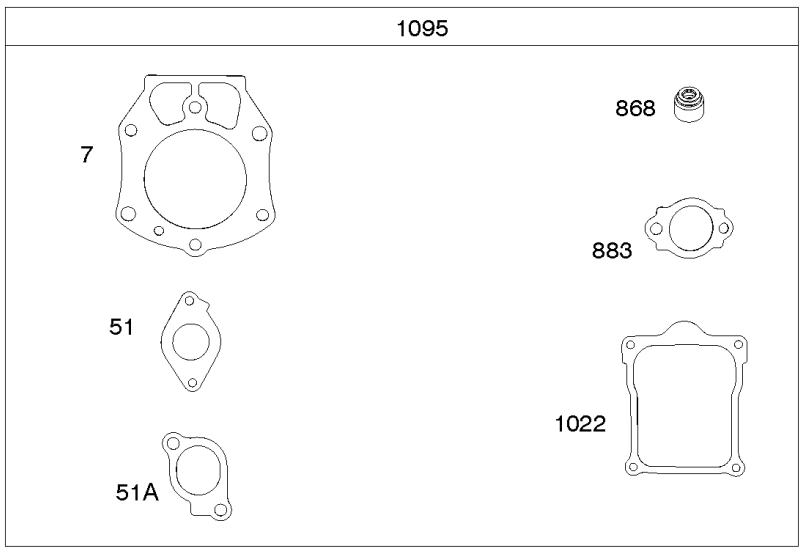

Not For InReproduction

Engine Gasket Set, Valve Gasket Set

REF NO	PART NO	QTY	DESCRIPTION
3	841596		SEAL, Oil -(Magneto Side)
7	809730		GASKET, Cylinder Head
9	842545		GASKET, Breather
20	841596		SEAL, Oil -(PTO Side)
51	846473		GASKET, Intake -(Intake Manifold/Throttle Body)
51A	841592		GASKET, Intake
358	846498		GASKET SET, Engine
439	692154		O-RING, Oil Gallery -(Crankcase Cover/Sump or Cylinder Assembly)
439A	846027		O-RING, Oil Gallery -(Crankcase Cover/Sump or Cylinder Assembly)
850	100106		SEALANT, Liquid
868	691963		SEAL, Valve
883	809872		GASKET, Exhaust
943	842538		SEAL, O-Ring -(Oil Pump Cover)
1022	809732		GASKET, Rocker Cover
1095	846499		GASKET SET, Valve

Not For Reproduction

Copyright © Briggs and Stratton. All Rights reserved

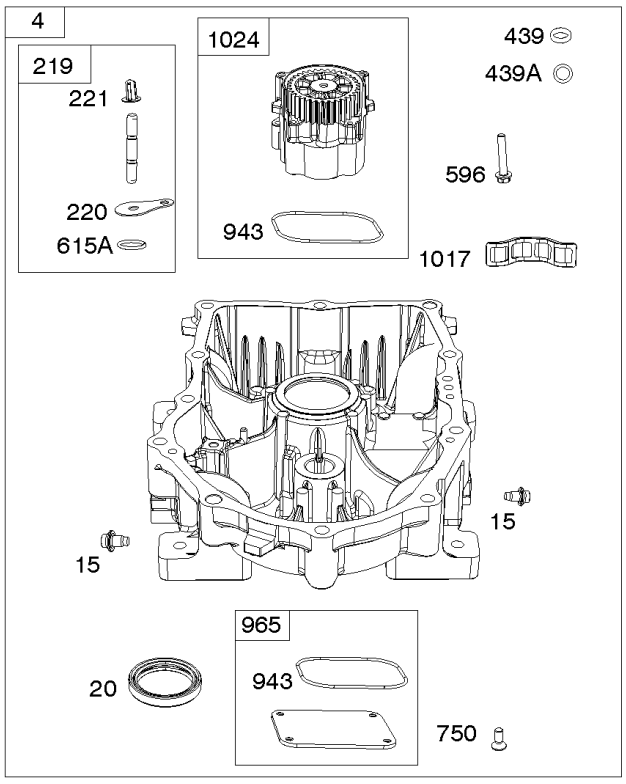

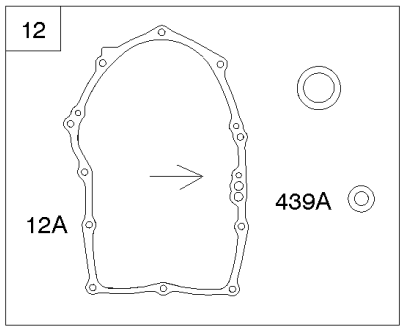

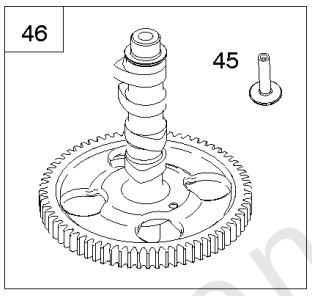

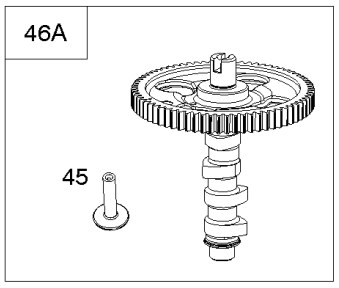

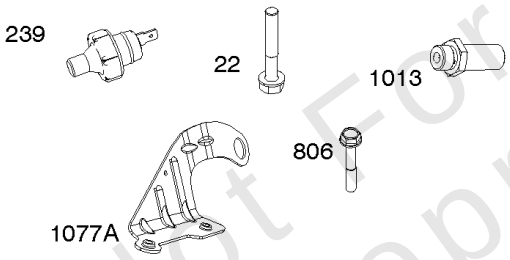

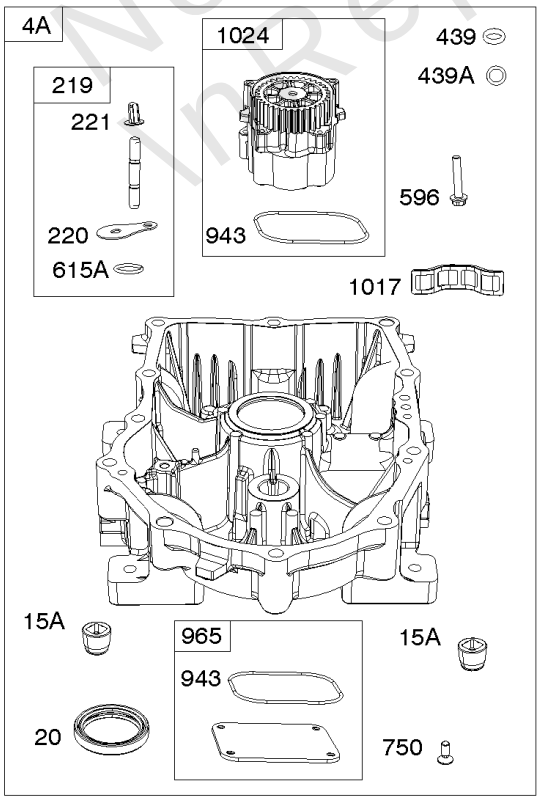

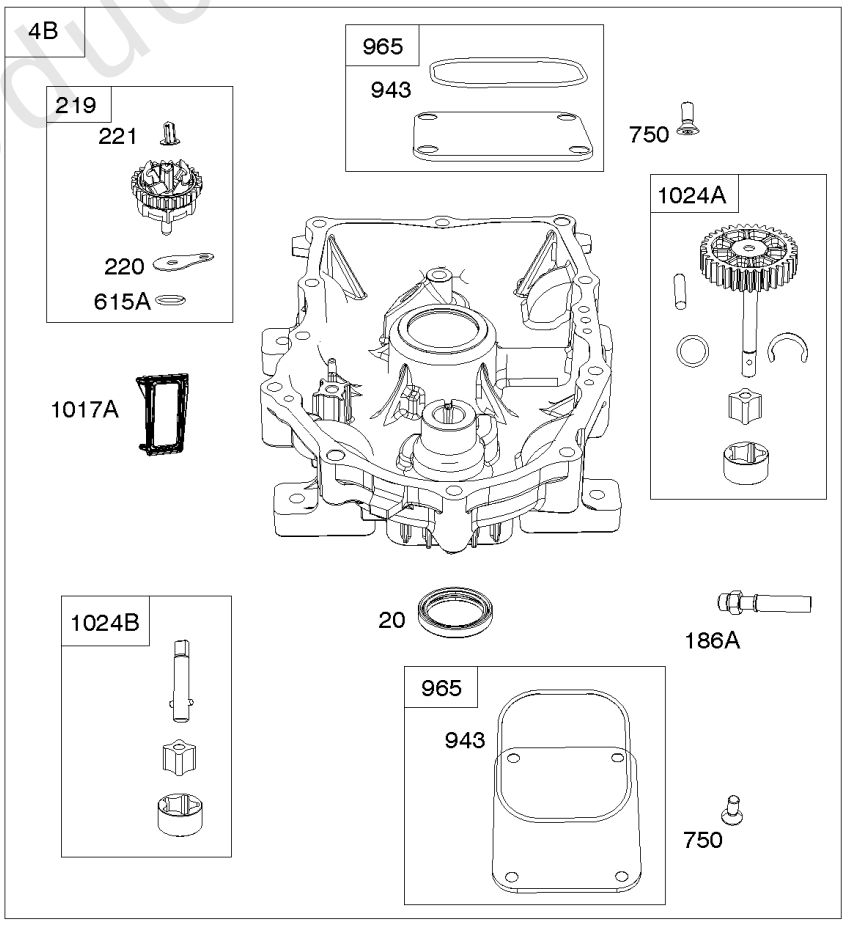

Not For Reproduction

Engine Sumps, Camshafts

REF NO	PART NO	QTY	DESCRIPTION
4B	847383		SUMP, Engine
12	846037		GASKET, Crankcase -(Metal Core Gasket)
12A	843969		GASKET, Crankcase -(Metal Core Gasket)
15A	691680		PLUG, Oil Drain
20	841596		SEAL, Oil -(PTO Side)
22	690676		SCREW -(Crankcase Cover/Sump) (M8x63mm)
45	809785		TAPPET, Valve
46A	847381		CAMSHAFT
186A	847344		CONNECTOR, Hose -(Engine Sump) or (Oil Filter Housing)
186B	847343		CONNECTOR, Hose
219	809426		GEAR, Governor
220	841608		WASHER -(Governor Gear)
221	841026		CUP, Governor
239	841281		SWITCH, Oil Pressure
439	692154		O-RING, Oil Gallery -(Crankcase Cover/Sump or Cylinder Assembly)
439A	846027		O-RING, Oil Gallery -(Crankcase Cover/Sump or Cylinder Assembly)
596	807385		SCREW -(Oil Pump) (M6x35mm)
615A	698290		RETAINER, Governor Shaft -(Engine Sump)
750	842537		SCREW -(Oil Pump Cover) (M6x10mm)
806	807362		SCREW -(Lifting Bracket) (M8x50mm)
943	842538		SEAL, O-Ring -(Oil Pump Cover)
965	842536		COVER, Oil Pump
1013	841602		NIPPLE, Oil Filter
1017A	796214		SCREEN, Oil Pump
1024A	847388		PUMP, Oil
1024B	847355		PUMP, Oil
1077A	847280		BRACKET, Lifting
1523	847341		VALVE, Check

Not For Reproduction

Copyright © Briggs and Stratton. All Rights reserved

Intake Manifold, Throttle Body, Fuel Lines

Mfg. No: 61E877-0005-J1

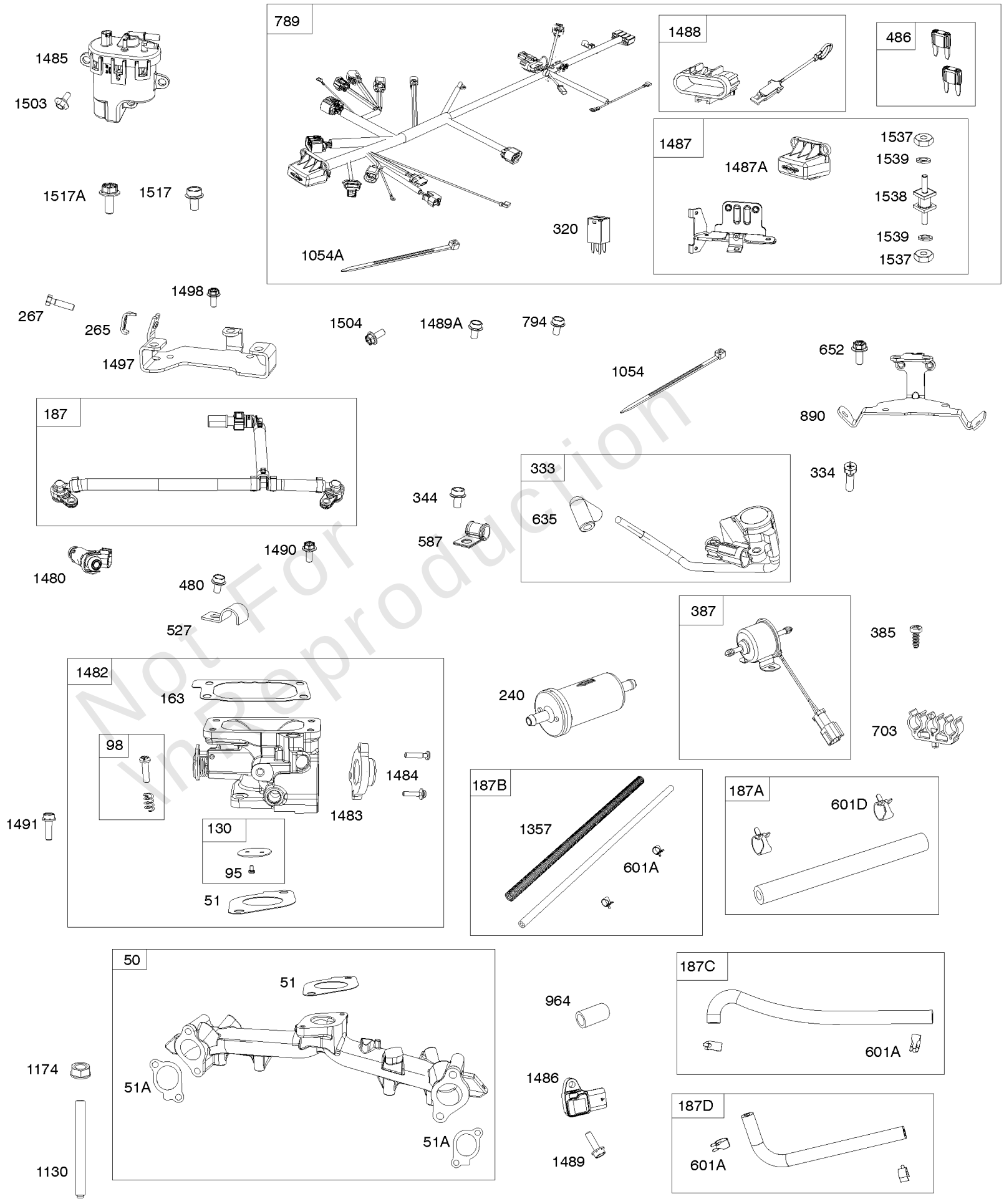

Not For Reproduction

Intake Manifold, Throttle Body, Fuel Lines

REF NO	PART NO	QTY	DESCRIPTION
50	846472		MANIFOLD, Intake
51	846473		GASKET, Intake -(Intake Manifold/Throttle Body)
51A	841592		GASKET, Intake
95	593897		SCREW -(Throttle Valve)
98	846817		KIT, Idle Speed
130	846808		VALVE, Throttle
163	807375		GASKET, Air Cleaner
187	846500		LINE, Fuel
187A	791766		LINE, Fuel -(Cut To Required Length)
187B	846823		LINE, Fuel
240	845125		FILTER, Fuel
265	691024		CLAMP, Casing
267	841552		SCREW -(Casing Clamp)
320	593902		RELAY(S)
333	846490		ARMATURE, Magneto -(Cylinders 1 and 2)
334	841552		SCREW -(Magneto Armature) (M5x20mm)
344	841233		SCREW -(Cable Clamp) (M6x10mm)
385	846250		SCREW -(Fuel Pump) (M6x16mm)
387	846824		PUMP, Fuel
480	841233		SCREW -(Tube Clamp) (M6x10mm)
486	593901		FUSE
527	690423		CLAMP, Tube -(TEMP/MAP Sensor) (Intake Manifold)
587	846866		CLAMP, Cable
601A	691038		CLAMP, Hose -(Black)
601D	791850		CLAMP, Hose -(Green)
635	692076		BOOT, Spark Plug
652	807084		SCREW -(Support Bracket) (M6x14mm)
703	846837		CLIP
789	847440		HARNESS, Wiring
794	847281		SCREW -(Wiring Harness) (M6x12mm)
890	846492		BRACKET, Support
964	590799		CAP, Connector
1054	280275		TIE, Cable -(Clear, Nylon)
1054A	861206		TIE, Cable -(Black, Nylon)
1130	841590		STUD -(Intake Manifold)
1174	842067		NUT -(Intake Manifold)
1357	846822		SLEEVE, Fuel Line
1480	593852		INJECTOR, Fuel

Not For Reproduction

Copyright © Briggs and Stratton. All Rights reserved

Intake Manifold, Throttle Body, Fuel Lines

Mfg. No: 61E877-0005-J1

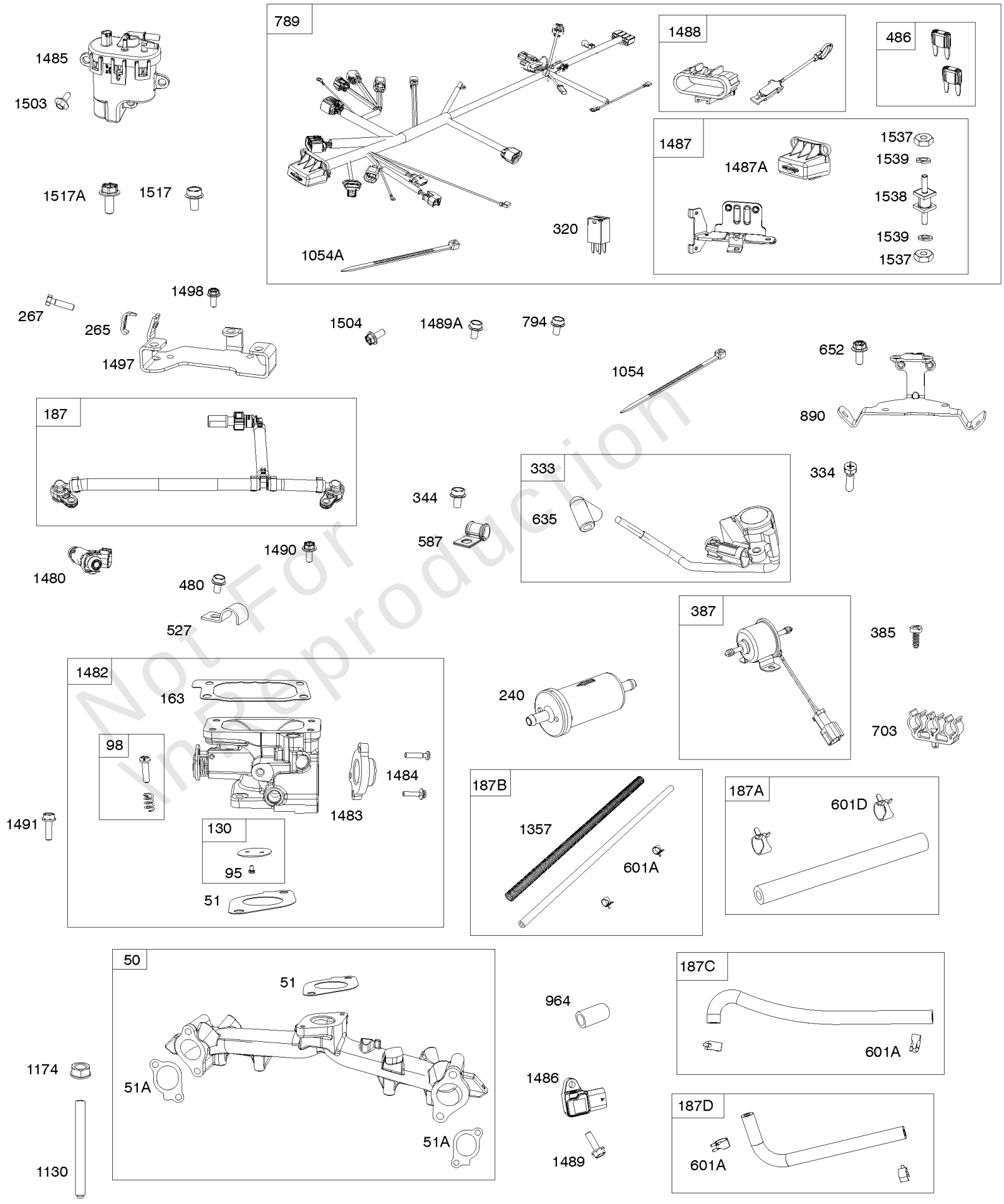

Not For Reproduction

Intake Manifold, Throttle Body, Fuel Lines

REF NO	PART NO	QTY	DESCRIPTION
1482	846807		BODY, Throttle
1483	593895		COVER, Dust
1484	847169		SCREW -(Dust Cover)
1485	593890		MODULE, Fuel
1486	593905		SENSOR, Temperature/Manifold Absolute Pressure (MAP)
1487	847337		COVER, Fuse
1487A	847334		COVER, Fuse
1488	593899		COVER, Diagnostic
1489	807435		SCREW -(TEMP/MAP Sensor) (M6x20mm)
1489A	846459		SCREW -(TEMP/MAP Sensor) (M5x10mm)
1490	807084		SCREW -(Fuel Injector) (M6x14mm)
1491	807435		SCREW -(Throttle Body) (M6x20mm)
1497	846486		BRACKET, Fuel Module
1498	807084		SCREW -(Fuel Module Bracket) (M6x14mm)
1503	594618		SCREW -(Fuel Module) (1/4-20x.5)
1504	841233		SCREW -(Fuse Cover) (Wire Harness) (M6x10mm)
1517	807084		SCREW -(ECU Bracket) (M6x14mm)
1517A	841233		SCREW -(ECU Bracket) (M6x10mm)
1537	703460		NUT -(Fuse Cover)
1538	847332		STUD -(Fuse Cover)
1539	847333		WASHER -(Fuse Cover)

Not For Reproduction

Copyright © Briggs and Stratton. All Rights reserved

Mfg. No: 61E877-0005-J1

OIL GUARD SYSTEM

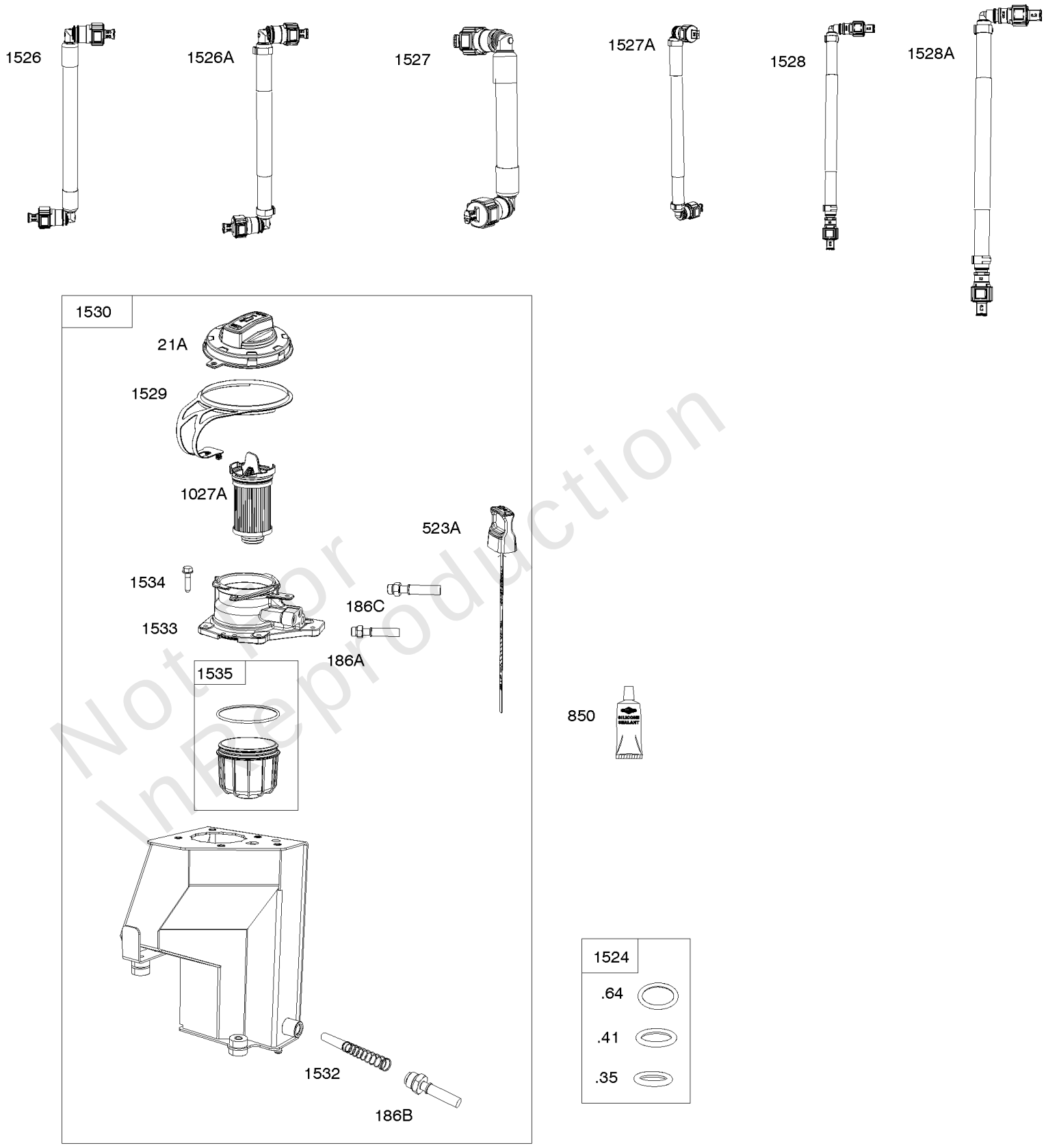

Not for Un Reproduction

Copyright © Briggs and Stratton. All Rights reserved

Oil Guard System - Tank, Hoses

REF NO	PART NO	QTY	DESCRIPTION
21A	595931		CAP, Oil Fill
186A	847344		CONNECTOR, Hose -(Engine Sump) or (Oil Filter Housing)
186B	847343		CONNECTOR, Hose
186C	847353		CONNECTOR, Hose -(Oil Filter Housing)
523A	595933		DIPSTICK
850	100106		SEALANT, Liquid
1027A	595930		FILTER, Oil
1524	847342		KIT, O-Ring -(Hose Connector) (Dry Sump Application)
1526	847349		HOSE, Oil Supply -(338mm Long)
1526A	847347		HOSE, Oil Supply -(382mm Long)
1527	847350		HOSE, Oil Scavenge -(549mm Long)
1527A	847348		HOSE, Oil Scavenge -(499mm Long)
1528	847351		HOSE, Oil Vent -(464mm Long)
1528A	595943		HOSE, Oil Vent -(902mm Long)
1529	595932		TETHER -(Oil Fill Cap)
1530	595945		TANK, Oil -(Mounting Grommets Available through OEM)
1532	847398		SCREEN, Oil -(Oil Tank)
1533	595986		HOUSING, Oil Filter
1534	593637		SCREW -(Oil Filter Housing)
1535	595987		CUP, Oil Filter -(Oil Filter Housing)

Not For Reproduction

Copyright © Briggs and Stratton. All Rights reserved

Replacement Engine - US & Canada

REF NO	PART NO	QTY	DESCRIPTION
	61E8770005	1	Replacement Engine
	835186	1	Replacement Short Block
	-----		Top No-Load Speed: 3600 -Trim: J1

Not For\nReproduction

VANGUARD®

COMMERCIAL POWER

BRIGGS & STRATTON®

Copyright © Briggs and Stratton. All Rights reserved